Agzamxodjaeva M.Sh

Mavzu:
Asosiy trigonometik ayniyatlar

7- Dars Mavzu:Keltirish formulalari

1. $\pi \pm \alpha$, $2\pi \pm \alpha$ (butun π lar) burchak funskiyalardan α burchak funksiyalariga o`tkazilganda funksiyaning nomi o`zgarmaydi.

2. $\frac{\pi}{2} \pm \alpha$, $3\frac{\pi}{2} \pm \alpha$ (yarimtalik π lar) burchak funskiyalardan α burchak funksiyalariga o`tkazilganda funksiyaning nomi o`zgaradi.

3. α ni o`tkir burchak deb hisoblab funksiyaning oldiga keltirayotgan funkisyaning burchagi yotgan chorakdagi ishorasi qo`yiladi.

Keltirish qoidasi

I	↕	Yoq, o'zgarmaydi
II	↔	Ha, o'zgaradi
III	Keltiril layotgan = ± keltiril gan	

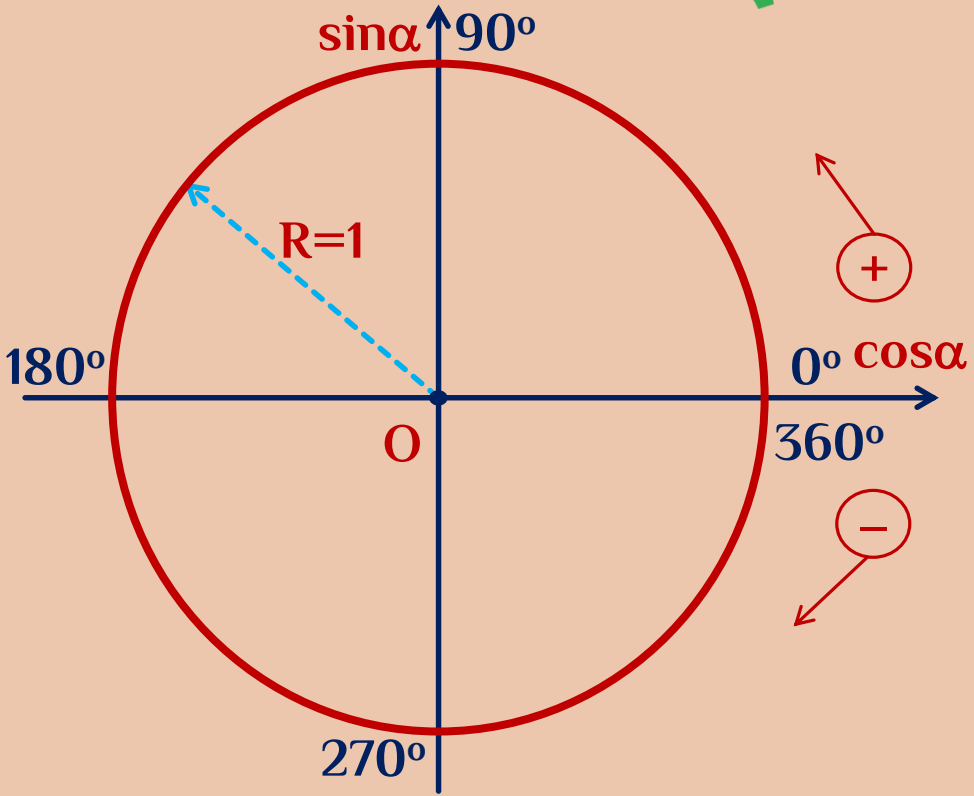

Misollar

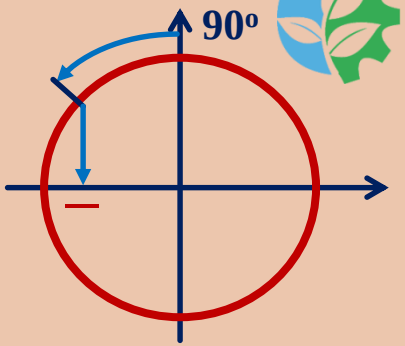

$$\cos(90^0 + \alpha) = -\sin\alpha$$

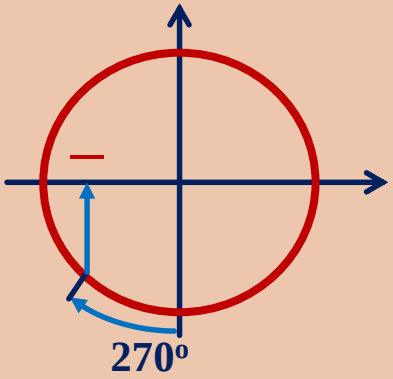

$$\cos(270^0 - \alpha) = -\sin\alpha$$

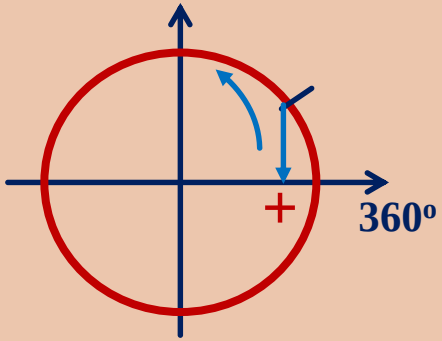

$$\cos(360^0 + \alpha) = +\cos\alpha$$

Misollar

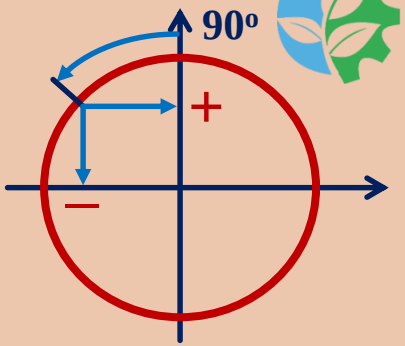

$$\mathbf{tg}(90^0 + \alpha) = \quad -\mathbf{ctg}\alpha$$

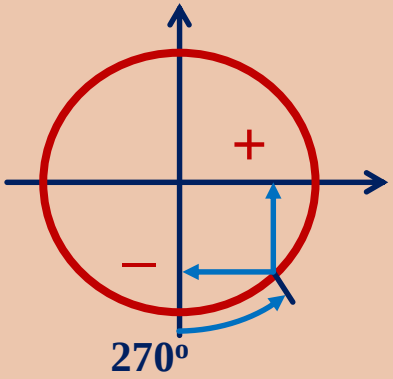

$$\mathbf{ctg}(270^0 + \alpha) = -\mathbf{tg}\alpha$$

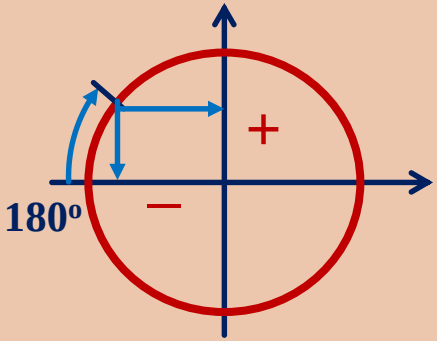

$$\mathbf{ctg}(180^0 - \alpha) = \quad -\mathbf{ctg}\alpha$$

Misollar

$$\frac{\sin(270^o+\alpha)+2\cos(180^0-\alpha)}{5\cos(-\alpha)}$$

$$\sin(270^o+\alpha)=-\cos\alpha$$

$$\cos(180^0-\alpha)=-\cos\alpha$$

$$\cos(-\alpha)=\cos\alpha$$

$$\boxed{\frac{-\cos\alpha-2\cos\alpha}{5\cos\alpha}=\frac{-3\cancel{\cos\alpha}}{5\cancel{\cos\alpha}}=-0,6}$$

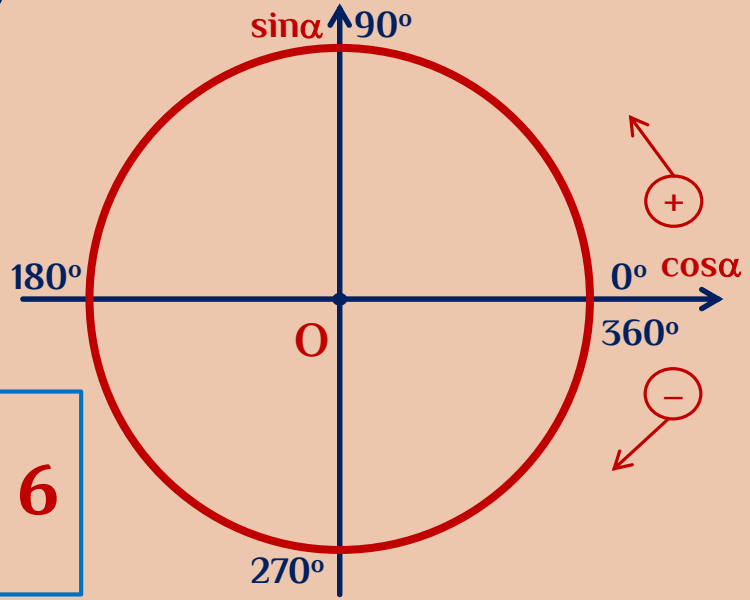

x	sinx	cosx	tgx	ctgx
$\frac{\pi}{2} - \alpha$	cosα	sinα	ctgα	tgα
$\frac{\pi}{2} + \alpha$	cosα	-sinα	-ctgα	-tgα
$\pi - \alpha$	sinα	-cosα	-tgα	-ctgα
$\pi + \alpha$	-sinα	-cosα	tgα	ctgα
$3\frac{\pi}{2} - \alpha$	-cosα	-sinα	ctgα	tgα
$3\frac{\pi}{2} + \alpha$	cosα	-sinα	-ctgα	-tgα