Agzamxodjaeva M.Sh

11-Mavzu: Eng sodda trigonometrik tenglamalar

$sinx = \alpha$TENGLAMA

Bilamizki, harqanday$x$uchun$sinx \in [-1; 1]$. Shuninguchun, $sinx = \alpha$ tenglama , $\alpha \in (-\infty; -1) \cup (1; +\infty)$.ya'ni $|\alpha| > 1$bo'lgandayechimgaegaemas.

Aytaylik, $|\alpha| \leq 1$bo'lsin.

Aylanadasinusiα bo'lgannuqtalarnibelgilaymiz.

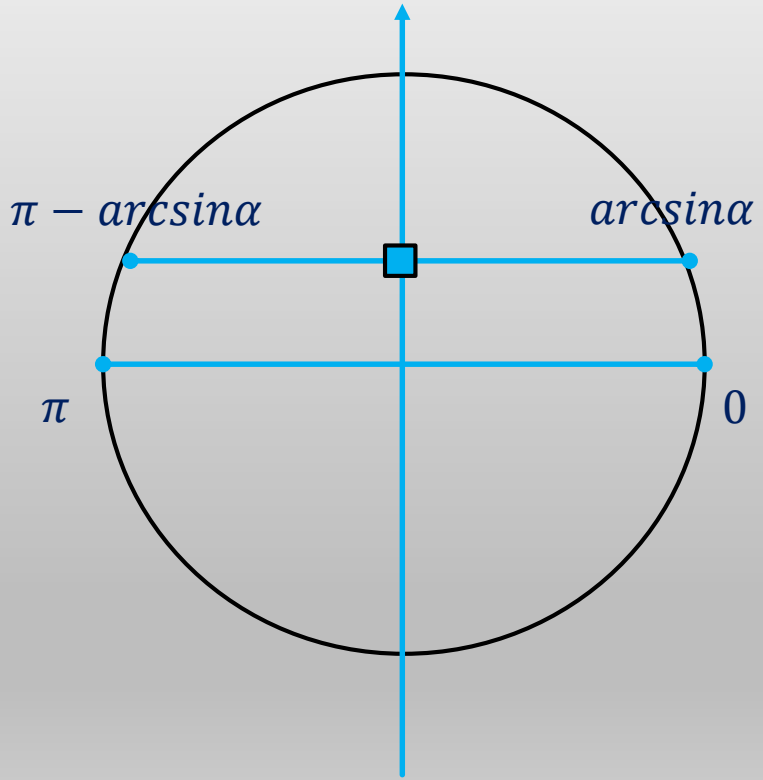
$\pi - arcsin\alpha$
$arcsin\alpha$
π
0

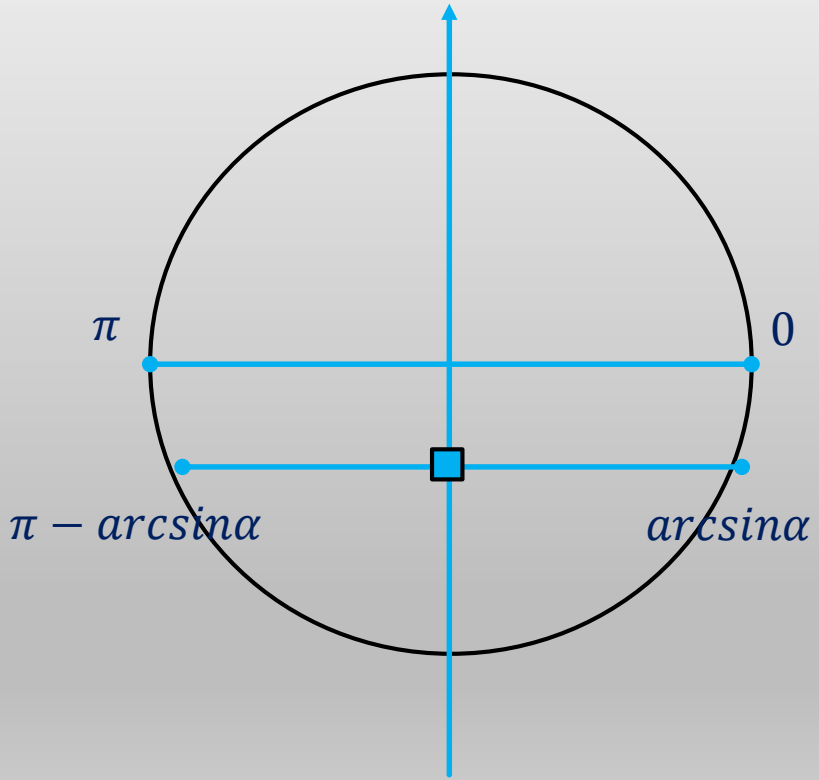
π
0
$\pi - arcsin\alpha$
$arcsin\alpha$

Chizmadanko'rinadiki, $\sin x = \alpha$***tenglama***$|\alpha| > 1$***da ikkitaasosiyyechimgaega. Ular:***

$$x_1 = \arcsin\alpha, x_2 = \pi - \arcsin\alpha$$

$P_\alpha = P_{\alpha+2\pi k}, k \in Z$***, bo'lganligidan***$x_1 = \arcsin\alpha$ ***yechimdan***

$$x_1 = \arcsin\alpha + 2\pi k, k \in Z,$$

$x_2 = \pi - \arcsin\alpha$***yechimdanesa***

$$x_2 = \pi - \arcsin\alpha + 2\pi k, k \in Z,$$

yechimlaroilasinihosilqilamiz. Yechimlarni$x_1 = \arcsin\alpha + 2\pi k$, $x_2 = -\arcsin\alpha + (2k+1)\pi, k \in Z$***, ko'rinishdaham yozishmumkin.***

Bu yechimlarnio'xshashko'rinishgakeltiribolamiz:

$x_1 = (-1)^{2k+1} arcsin\alpha + (2k+1)\pi$,

Bu yerda $k \in Z$. ***Lekin*** $2k$ ***va*** $2k+1$ ***sonlar*** $k \in Z$ ***da barchabutunsonlarniifodalaganiuchunularniumumiy*** $n \in Z$ ***bilanalmashtirishmumkin:***

$$x = (-1)^n arcsin\alpha + \pi n, n \in Z$$

Shundayqilib, $sinx = \alpha$ ***tenglama*** $|\alpha| > 1$ ***da yechimgaegaemas,*** $|\alpha| \leq 1$ ***da esayechimlari*** $(-1)^n arcsin\alpha + \pi n, n \in Z$ ***formula bilanberiladi.***

Misollar

1. $\sin x = \frac{2}{7}$ *tenglama yechimi:*

$$x = (-1)^n \arcsin\frac{2}{7} + \pi n, n \in Z$$

2. $\sin x = -\frac{1}{2}$ *tenglama yechimi:*

$$x = (-1)^n \arcsin\left(-\frac{1}{2}\right) + \pi n$$

$$x = (-1)^n \left(-\frac{\pi}{6}\right) + \pi n$$

$$x = (-1)^{n+1}\frac{\pi}{6} + \pi n, n \in Z$$

$cosx = \alpha$TENGLAMA

$|\alpha| > 1$da $cosx = \alpha$tenglamayechimgaegaemas.

$|\alpha| \leq 1$bo'lgannuqtalarnibirlikaylanadabelgilaymiz.

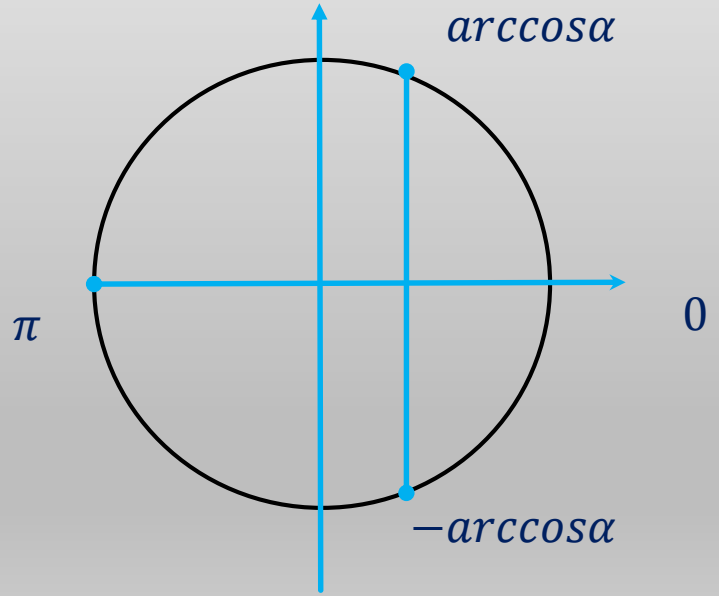

Demak, $cosx = \alpha$ tenglamaikkita:
$x_1 = arccos\alpha$ va $x_1 = -arccos\alpha$ ildizlargaega. $P_\alpha = P_{\alpha+2\pi k}, k \in Z$ gako'ratenglamaildizlari $x_1 = arccos\alpha + 2\pi k, k \in Z$ hamda $x_2 = -arccos\alpha + 2\pi k, k \in Z$. Ularni birgalikda

$$x = \pm arcsin\alpha + 2\pi k, k \in Z$$

ko'rinishdayoziladi.

Misollar

1. $sinx = \frac{2}{3}$ *tenglama yechimi:*

$$x = \pm arccos\frac{2}{3} + 2\pi k, k \in Z$$

2. $cosx = -\frac{1}{2}$ *tenglama yechimi:*

$$x = \pm arccos\left(-\frac{1}{2}\right) + 2\pi k$$

$$x = \pm\left(\pi - \frac{\pi}{3}\right) + 2\pi k$$

$$x = \frac{2\pi}{3} + \pi n, k \in Z$$